SBE

Dimensions in mm.
Other types available on request.

Material: N/A



Every care has been taken to ensure the accuracy of the information in this document, but we take no liability for any errors or omissions. We reserve the right to make changes without prior notice.

General Data

Designation	Dynamic Load Capacity (N)	Static Load Capacity (N)	Number Of Ball Rows
SBE16UU	1530	1280	5
SBE20UU	2630	1700	6
SBE25UU	3880	2810	6
SBE30UU	4810	2860	6
SBE40UU	6630	5840	6
SBE50UU	11690	8100	6

Dimensions

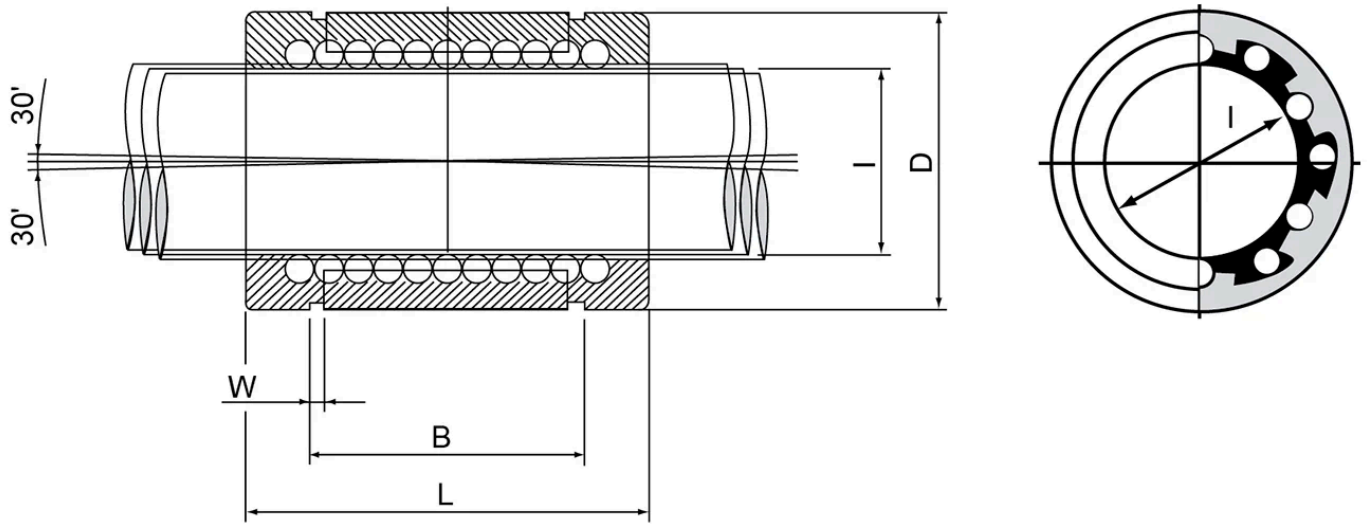

Designation	I	D	L	W	B
SBE16UU	16	26	36	1.3	24.6
SBE20UU	20	32	45	1.6	31.2
SBE25UU	25	40	58	1.85	43.7
SBE30UU	30	47	68	1.85	51.7
SBE40UU	40	62	80	2.15	60.3
SBE50UU	50	75	100	2.65	77.3

Every care has been taken to ensure the accuracy of the information in this document, but we take no liability for any errors or omissions. We reserve the right to make changes without prior notice.