MGTB



The MGTB is a toothed belt driven mini linear unit where the rotary motion (rotation) of the drive shaft is converted to the linear motion (translation) of the carriage with high mechanical efficiency and low internal friction.

High-performance features such as high speed, good positioning accuracy, and high repeatability are ensured through a zero-backlash toothed belt drive and a linear guiding system.

A preassembled standard motor (with a motor adapter and a coupling) together with the standard drive, makes the system plug and drive ready. Compact dimensions and optimally selected motor combinations cover a wide range of applications.

Options, such as different motor sizes, together with a wide range of accessories and possible multi-axis system combinations make this product highly flexible.

□ = Square cross section

Dimensions in mm.

For other CAD files, please contact Rollco.

Ambient Temperature (°C): 0 °C ~ +50 °C
Ambient Temperature without a Motor (°C): 0 °C ~ +60 °C
Protection Class: IP40
Duty Cycle: 100 %
Maintenance: Life-time pre-lubricated

Every care has been taken to ensure the accuracy of the information in this document, but we take no liability for any errors or omissions. We reserve the right to make changes without prior notice.



MGTB with motor and motor adapter VK

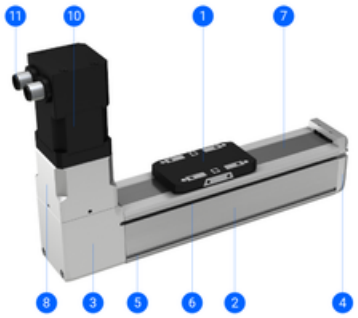

1. Carriage
2. Aluminium profile
3. Drive block with a pulley
4. End block
5. Mounting slots
6. Slot for the magnetic field sensors
7. Corrosion-resistance protection strip
8. Motor adapter VK with a coupling
10. Preassembled motor (with/without a brake)
11. Standard connectors (motor, encoder and brake – optionally)

MGTB without motor

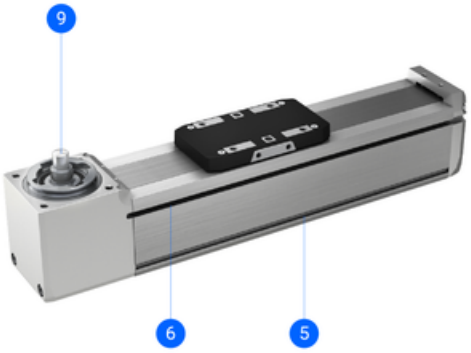

5. Mounting slots
6. Slot for the magnetic field sensors
9. The drive shaft of the pulley

General Data

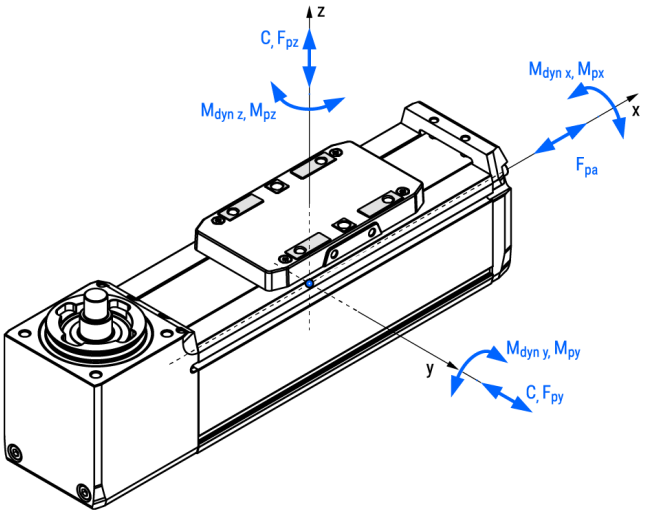

The moved mass is already considered in the equation for calculating the mass of the linear unit m_{MGTB} and the mass moment of inertia J_{MGTB}. The moved mass includes the mass of the carriage.

For the combination with a standard motor and motor adapter VK the mass m_{MGTB} should be increased by m_{VK+m}.

Abs. stroke	Absolute stroke [mm]
m_{load}	Applied mass to be moved [kg]

Every care has been taken to ensure the accuracy of the information in this document, but we take no liability for any errors or omissions. We reserve the right to make changes without prior notice.

Designation	Description	Dynamic Load Capacity C (N)	Dynamic Moment Mx (Nm)	Dynamic Moment My (Nm)	Dynamic Moment Mz (Nm)
MGTB 32	Without a motor	1310	4.8	4.1	4.1
MGTB 45	Without a motor	3240	20.1	17.4	17.4
MGTB 60	Without a motor	11190	77.4	79.8	79.8

Designation	Max. Permissible Loads Forces Fpy (N)	Max. Permissible Loads Forces Fpz (N)	Max. Permissible Loads Moments Mpx (Nm)	Max. Permissible Loads Moments Mpy (Nm)	Max. Permissible Loads Moments Mpz (Nm)	Max. Repeatability (mm)
MGTB 32	200	300	2.0	1.8	1.3	± 0.08
MGTB 45	400	700	7.4	6.3	4.7	± 0.08
MGTB 60	850	2000	29.2	30.8	31.8	± 0.08

Designation	Absolute Stroke	Pulley Drive Ratio (mm/rev)	Pulley Diameter (mm)	Max. Permissible Axial Load Fpa (N)	Max. Permissible Payload Horizontal mph (kg)	Max. Permissible Payload Vertical mpv (kg)
MGTB 32	100, 200, 300, 400, 500, 600, 700, 800, 1000, 1200, 1400, 1600	66	21.00	65	31	5.4
MGTB 45	100, 200, 300, 400, 500, 600, 700, 800, 1000, 1200, 1400, 1600	63	20.05	85	42	7.1
MGTB 60	100, 200, 300, 400, 500, 600, 700, 800, 1000, 1200, 1400, 1600, 1800, 2000	78	24.83	130	65	11

Designation	Max. Drive Torque M_P (Nm)	No Load Torque M_0 (Nm)	Max. Permissible Radial Load on Shaft Fpr (N)	Max. Travel Speed Vmax (m/s)	Max. Rotational Speed (rev/min)	Max. Acceleration (m/s²)
MGTB 32	0.68	0.07	50	1500	1365	20
MGTB 45	0.85	0.20	100	1500	1430	20
MGTB 60	1.61	0.40	200	1500	1155	20

Designation	Moved Mass (kg)	Mass of Linear Unit (kg)	Mass Moment of Inertia JMGTB (10^{-2} kg cm²)	Planar Moment of Inertia Iy (cm⁴)	Planar Moment of Inertia Iz (cm⁴)
MGTB 32	0.06	0.37 + 0.0012 × Abs. Stroke	9.19 + 0.0024 × Abs. Stroke + 110.339 × mload	4.3	4.6
MGTB 45	0.15	0.92 + 0.0023 × Abs. Stroke	18.80 + 0.0022 × Abs. Stroke + 100.536 × mload	14.3	15.9
MGTB 60	0.45	2.12 + 0.0041 × Abs. Stroke	81.72 + 0.0040 × Abs. Stroke + 154.110 × mload	43.8	50.3

Every care has been taken to ensure the accuracy of the information in this document, but we take no liability for any errors or omissions. We reserve the right to make changes without prior notice.

Dimensions

MGTB without motor

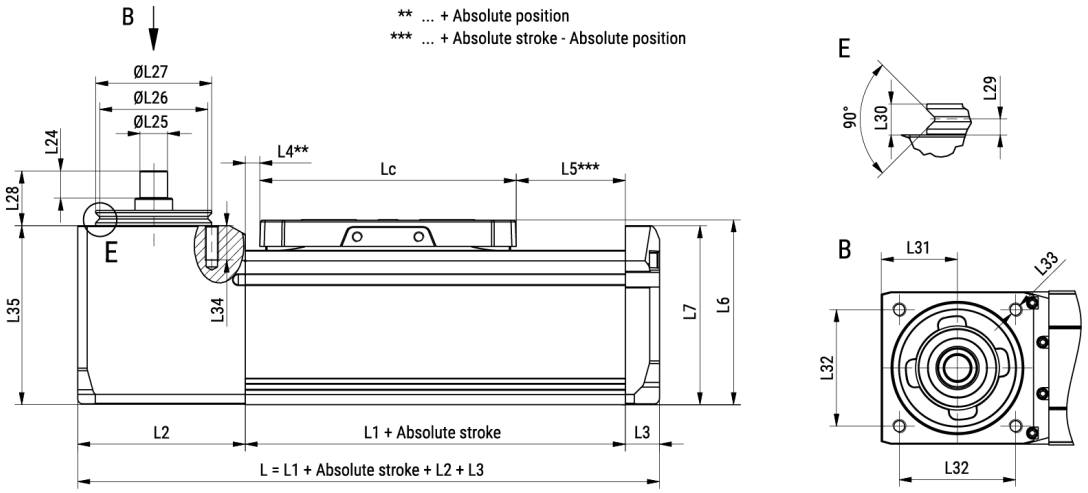

Absolute stroke of the MGTB definition

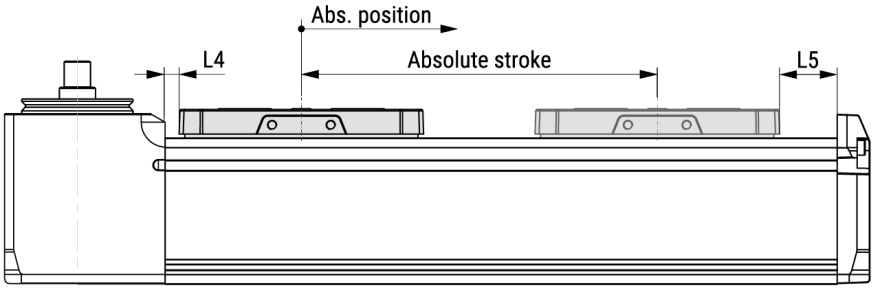

Designation	Lc	L1	L2	L3	L4	L5	L6	L7	L8
MGTB 32	65	104	32.75	8	2.5	36.5	38.5	35.75	32
MGTB 45	75	124	49	10	4.3	44.7	54	52.25	45
MGTB 60	90	139	64	12	3.2	45.8	72	68.75	60

Designation	L9	L10	L11	L12	L13	L14	L15	L16	L17	L18
MGTB 32	4.4	23.7	4	5.9	18	M2	4	14.6	18.4	22.5
MGTB 45	4.4	36.5	5	7.8	18	M3	6	18.6	16.4	32
MGTB 60	4.4	45	6	11	30	M4	6	25.4	38.4	45

Designation	L19	L20	L21	L22	L23	L24	L25	L26	L27	L28
MGTB 32	30	35	M3	2 (H7)	5	7	5 (h7)	22.6	25 (h7)	14
MGTB 45	42	42	M4	4 (H7)	6	8	8 (h7)	31.6	34 (h7)	16
MGTB 60	57	55	M5	5 (H7)	8	10	10 (h7)	39.6	42 (h7)	20

Designation	L29	L30	L31	L32	L33	L34	L35
MGTB 32	2.3	4.5	15.75	24.5	M3	3	37.75
MGTB 45	2.3	4.5	22.25	34	M4	10	54.85

Every care has been taken to ensure the accuracy of the information in this document, but we take no liability for any errors or omissions. We reserve the right to make changes without prior notice.

Designation	L29	L30	L31	L32	L33	L34	L35
MGTB 60	2.3	4.5	29.75	48	M5	10	72.50

Every care has been taken to ensure the accuracy of the information in this document, but we take no liability for any errors or omissions. We reserve the right to make changes without prior notice.