Clamping fixtures

Mini linear units MGBS & MGTB and Mini electric cylinders & sliders MCE & MSCE can be mounted by clamps, which are placed in the slot on the side of the profile. Clamps can also attach to the carriage of the mini linear unit, fixing another mini linear unit (or mini electric cylinder MCE or slider MSCE) to the carriage at an angle of 90° (i.e. for multi-axis systems).



Material: powder coated zinc alloy

Dimensions in mm.

Every care has been taken to ensure the accuracy of the information in this document, but we take no liability for any errors or omissions. We reserve the right to make changes without prior notice.





General Data

Designation	Screw Type	Type	Compatible with	Countersink for	Mass (g)
MG - M3 - T1 - 108216	M3	T1	MGBS, MGTB, MCE, MSCE	DIN 912	6
MG - M3 - T2 - 108218	M3	T2	MGBS, MGTB, MCE, MSCE	DIN 912	12
MG - M4 - T1 - 108217	M4	T1	MGBS, MGTB, MCE, MSCE	DIN 912	5
MG - M4 - T2 - 108219	M4	T2	MGBS, MGTB, MCE, MSCE	DIN 912	16
MG - M5 - T1 - 112526	M5	T1	MGBS, MGTB	DIN 912	6
MG - M5 - T2 - 112527	M5	T2	MGBS, MGTB	DIN 912	27

Dimensions

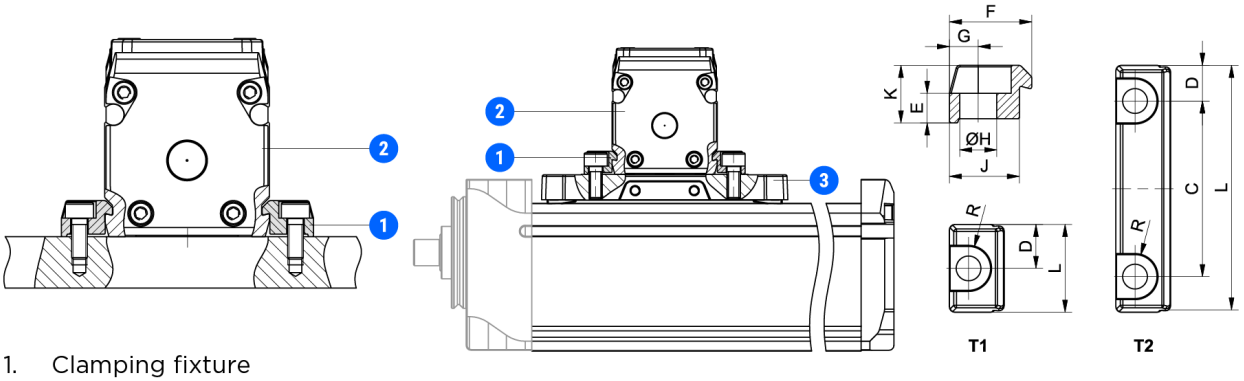

1. Clamping fixture
2. Profile
3. Carriage

Designation	C	D	E	F	G	H	J	K	L
MG - M3 - T1 - 108216	-	8	3.6	10	3.5	3.4	8.5	7	16
MG - M3 - T2 - 108218	22.5	4.75	3.6	10	3.5	3.4	8.5	7	32
MG - M4 - T1 - 108217	-	8	2.5	10	3.5	4.5	8.5	7	16
MG - M4 - T2 - 108219	32	6.5	2.5	10	3.5	4.5	8.5	7	45
MG - M5 - T1 - 112526	-	8	4	11	4.5	5.5	9.5	7.5	16
MG - M5 - T2 - 112527	45	7.5	4	11	4.5	5.5	9.5	7.5	60

Every care has been taken to ensure the accuracy of the information in this document, but we take no liability for any errors or omissions. We reserve the right to make changes without prior notice.

Designation	R
MG - M3 - T1 - 108216	3.25
MG - M3 - T2 - 108218	3.25
MG - M4 - T1 - 108217	4
MG - M4 - T2 - 108219	4
MG - M5 - T1 - 112526	4.5
MG - M5 - T2 - 112527	4.5

Every care has been taken to ensure the accuracy of the information in this document, but we take no liability for any errors or omissions. We reserve the right to make changes without prior notice.