Magnetic field sensors

Magnetic field sensors can be mounted using the slot for the magnetic field sensor, placed on both sides of the MGBS / MGTB profile.



Dimensions in mm.

Function principle: Magnetic
Switching function: NC normally close ; NO normally open
Wiring method: 3-wire type
Sensor Type: PNP current sourcing
Operating Voltage (V DC): 5 ~ 30
Max. Switching Current (mA): 200
Contact rating: 6 W max.
Voltage drop: 0,5 V @ 200 mA max.
Current consumption: 6 mA @ 24 V DC max.
Max. Leakage Current (mA): 0,01
Operating Frequency (Hz): 1000 max.
Ambient Temperature (°C): –10 ~ +70
Shock/vibration: 50 G / 9 G
Protection Class: IP67
LED indicator: Green
Electrical connection: M8, 3-pin
Extension cable: Energy chain compliant
Cable (Diameter, Material, Length): ø2,8 mm, PUR, 150 mm

Every care has been taken to ensure the accuracy of the information in this document, but we take no liability for any errors or omissions. We reserve the right to make changes without prior notice.







General Data

Magnetic field sensor and extension cable

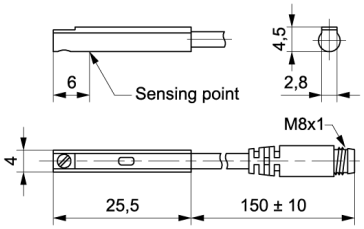

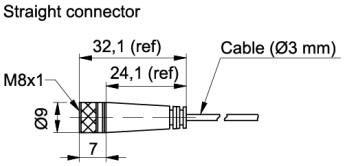

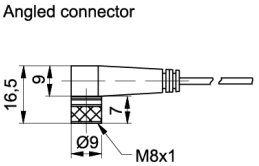

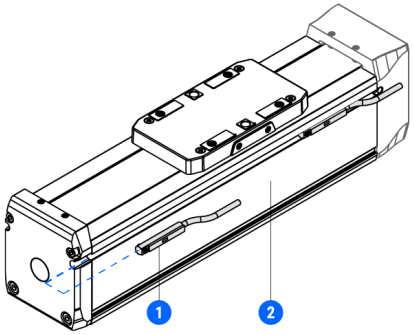

1. Magnetic field sensor
2. Profile of the MGBS/MGTB

Every care has been taken to ensure the accuracy of the information in this document, but we take no liability for any errors or omissions. We reserve the right to make changes without prior notice.

Designation	Type	Compatible with	Length (m)
SMO 40 TP K NC - 109125	-	MGBS/MGTB	-
SMO 40 TP K NO - 12259	-	MGBS/MGTB	-
Extension cable - 8146	Straight connector extension cable	SMO 40 TP K NC/SMO 40 TP K NO	2
Extension cable - 8147	Straight connector extension cable	SMO 40 TP K NC/SMO 40 TP K NO	5
Extension cable - 9017	Angled connector extension cable	SMO 40 TP K NC/SMO 40 TP K NO	2
Extension cable - 9019	Angled connector extension cable	SMO 40 TP K NC/SMO 40 TP K NO	5

Every care has been taken to ensure the accuracy of the information in this document, but we take no liability for any errors or omissions. We reserve the right to make changes without prior notice.