Motor

For Mini Linear Units MGBS & MGTB and MCE & MSCE Mini Electric Cylinders & Sliders.

See documentation below for more information.

Dimensions in mm.

Ambient Temperature (°C): –10 ~ +50
Ambient Humidity: Max. 85 % (non-condensing)
Protection Class: IP65
Duty Cycle: 100 %



Every care has been taken to ensure the accuracy of the information in this document, but we take no liability for any errors or omissions. We reserve the right to make changes without prior notice.





General Data

Designation	Compatible with	Motor Type	Motor Size (mm)	Brake	Voltage (V DC)
STMN-42-L-E	MGBS/MGTB 32 & 45, MCE/MSCE 32 & 45	Stepper	42	Without	3.15
STMN-42-L-E-B	MGBS/MGTB 32 & 45, MCE/MSCE 32 & 45	Stepper	42	With	3.15
STMN-56-L-E	MGBS/MGTB 45 & 60, MCE/MSCE 45	Stepper	56	Without	2.4
STMN-56-L-E-B	MGBS/MGTB 45 & 60, MCE/MSCE 45	Stepper	56	With	2.4

Designation	Current per Phase (A)	Mass Moment of Inertia (kg cm²)	Holding Torque (Nm)	Step Angle (°)	Resistance per Phase (Ohm)	Inductance per Phase (mH)
STMN-42-L-E	1.8	0.082	0.5	1.8 ± 5 %	1.75 ± 15 %	3.3 ± 20 %
STMN-42-L-E-B	1.8	0.095	0.5 (motor); 0.4 (brake)	1.8 ± 5 %	1.75 ± 15 %	3.3 ± 20 %
STMN-56-L-E	4.2	0.480	1.87	1.8 ± 5 %	0.58 ± 15 %	1.9 ± 20 %
STMN-56-L-E-B	4.2	0.501	1.87 (motor) ; 1.0 (brake)	1.8 ± 5 %	0.58 ± 15 %	1.9 ± 20 %

Designation	Voltage Constant (mV/min⁻¹)	Mass (kg)	Type	Measuring Principle	Interface	Resolution
STMN-42-L-E	23	0.44	Incremental	Opto-electrical	Line drive	500/2000 (cpr/ppr)
STMN-42-L-E-B	23	0.57	Incremental	Opto-electrical	Line drive	500/2000 (cpr/ppr)
STMN-56-L-E	32.5	1.14	Incremental	Opto-electrical	Line drive	500/2000 (cpr/ppr)
STMN-56-L-E-B	32.5	1.33	Incremental	Opto-electrical	Line drive	500/2000 (cpr/ppr)

Designation	Operating Voltage (V DC)	Rated Output (W)
STMN-42-L-E	5	8
STMN-42-L-E-B	5 (encoder) ; 24 (+6/–10 %) (brake)	8
STMN-56-L-E	5	10
STMN-56-L-E-B	5 (encoder) ; 24 (+6/–10 %) (brake)	10

Every care has been taken to ensure the accuracy of the information in this document, but we take no liability for any errors or omissions. We reserve the right to make changes without prior notice.

Dimensions

Motor without brake STMN-42-L-E

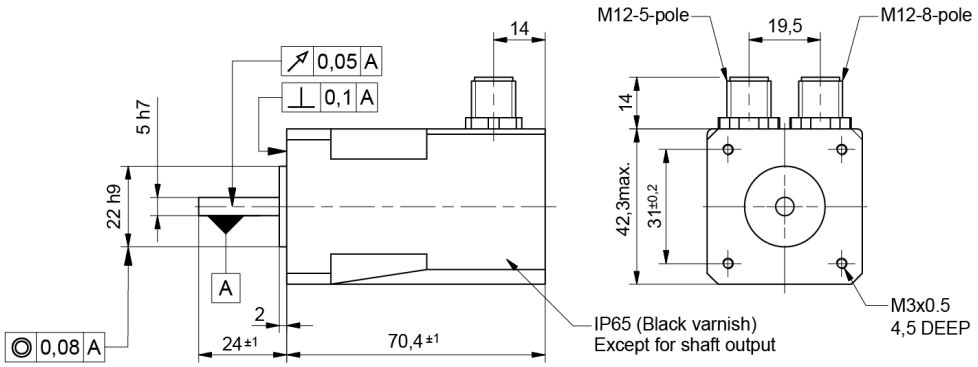

Motor with brake STMN-42-L-E-B

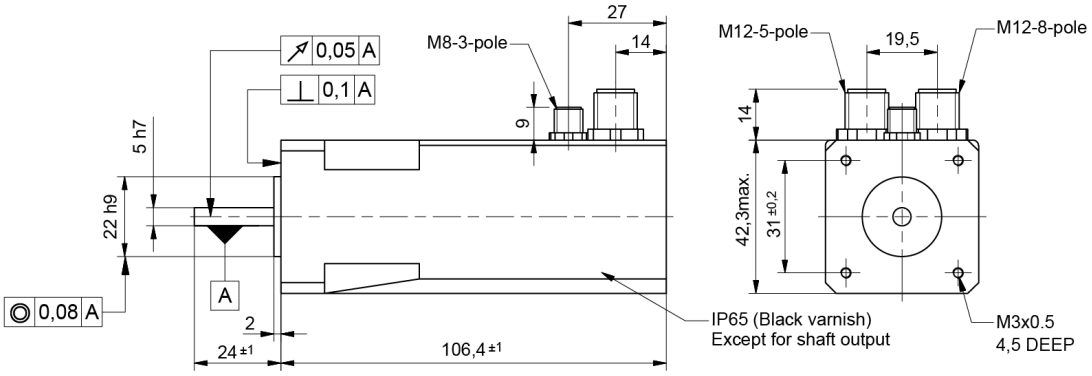

Every care has been taken to ensure the accuracy of the information in this document, but we take no liability for any errors or omissions. We reserve the right to make changes without prior notice.

Motor without brake STMN-56-L-E

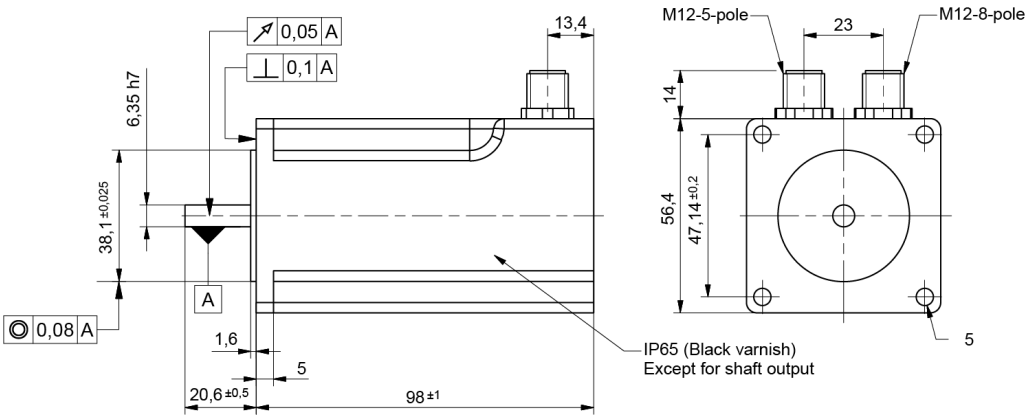

Motor with brake STMN-56-L-E-B

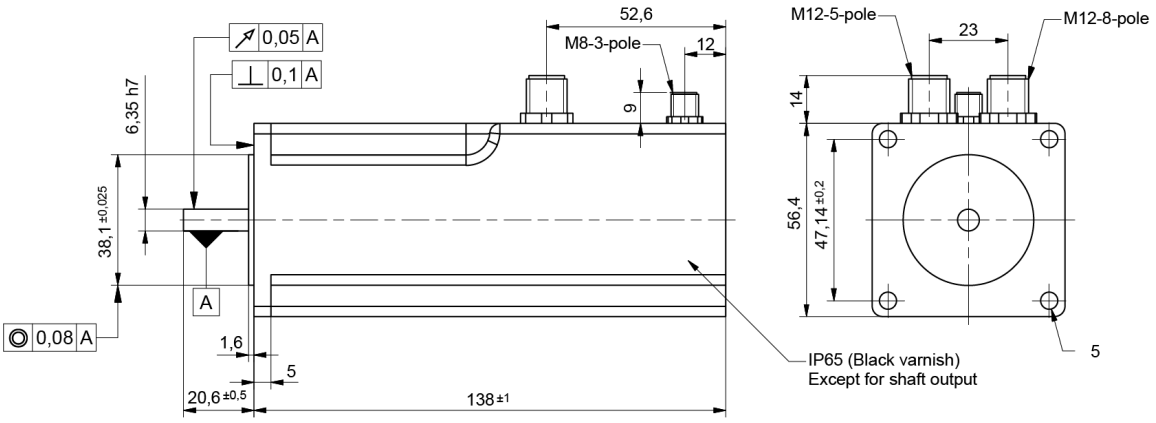

Designation	E1	E2	E3	E4	E5	E6	E7	E8	E9
STMN-42-L-E	M12 5-pole	M12 8-pole	-	14	14	19.5	-	-	70.4
STMN-42-L-E-B	M12 5-pole	M12 8-pole	M8 3-pole	14	14	19.5	9	27	106.4
STMN-56-L-E	M12 5-pole	M12 8-pole	-	14	13.4	23	-	-	98
STMN-56-L-E-B	M12 5-pole	M12 8-pole	M8 3-pole	14	52.4	23	9	12	138

Designation	E10
STMN-42-L-E	42.3
STMN-42-L-E-B	42.3
STMN-56-L-E	56.4
STMN-56-L-E-B	56.4

Every care has been taken to ensure the accuracy of the information in this document, but we take no liability for any errors or omissions. We reserve the right to make changes without prior notice.