Elastomer Coupling EKM

- With radial clamping hub on both sides
- Plug-in, backlash-free, oscillation dampening
- Cost-effective standard series, very short design



Peak torque is in general 1,5 times nominal.

Dimensions in mm. Length dimensions according to DIN ISO 2768 cH.

Material: Elastomer spider: polyurethane Hubs: high-tensile strength aluminum (size 2000: tempered steel) Screws: ISO 4762 - 12.9
Temperature range (°C): Depends on size, see table.

Every care has been taken to ensure the accuracy of the information in this document, but we take no liability for any errors or omissions. We reserve the right to make changes without prior notice.

General Data

Designation	Nominal Torque (Nm)	Hardness (shore)	Moment of inertia (10^{-6}kg*m²)	Torsional stiffness (Nm/arcmin)	Axial max. shaft misalignment (mm)
EKM8	8	98 Sh-A	0.01	0.09	0.5
EKM15	15	98 Sh-A	0.03	0.24	0.5
EKM20	20	72 Sh-D	0.03	0.46	0.5
EKM30	30	98 Sh-A	0.09	0.7	0.5
EKM45	45	72 Sh-D	0.09	1.1	0.5
EKM60	60	98 Sh-A	0.18	1.0	0.5
EKM90	90	72 Sh-D	0.18	2.0	0.5
EKM150	150	98 Sh-A	0.38	1.2	1
EKM200	200	72 Sh-D	0.38	2.3	1
EKM300	300	98 Sh-A	1.0	3.6	1
EKM400	400	72 Sh-D	1.0	7.0	1
EKM500	500	98 Sh-A	2.2	4.5	1
EKM700	700	98 Sh-A	5.2	8.0	1
EKM1000	1 000	72 Sh-D	5.2	12	1
EKM2000	2 000	98 Sh-A	50	21	1

Designation	Lateral max. shaft misalignment (mm)	Lateral spring rate (N/mm)	Max. Speed (rpm)	Weight (kg)	Temperature range (°C)
EKM8	0.10	600	29 000	0.06	–30° to +90°C
EKM15	0.10	2 100	23 000	0.12	–30° to +90°C
EKM20	0.10	2 900	23 000	0.12	–20° to +120°C
EKM30	0.10	2 500	19 000	0.21	–30° to +90°C
EKM45	0.10	3 600	19 000	0.21	–20° to +120°C
EKM60	0.10	2 600	17 000	0.32	–30° to +90°C
EKM90	0.10	3 700	17 000	0.32	–20° to +120°C
EKM150	0.10	3 300	15 000	0.52	–30° to +90°C
EKM200	0.07	4 600	15 000	0.52	–20° to +120°C
EKM300	0.12	4 500	12 000	0.9	–30° to +90°C
EKM400	0.10	6 500	12 000	0.9	–20° to +120°C
EKM500	0.15	5 900	9 500	1.5	–30° to +90°C
EKM700	0.15	7 000	8 000	2.5	–30° to +90°C
EKM1000	0.10	9 600	8 000	2.5	–20° to +120°C
EKM2000	0.15	9 000	6 000	14	–30° to +90°C

Every care has been taken to ensure the accuracy of the information in this document, but we take no liability for any errors or omissions. We reserve the right to make changes without prior notice.

Dimensions

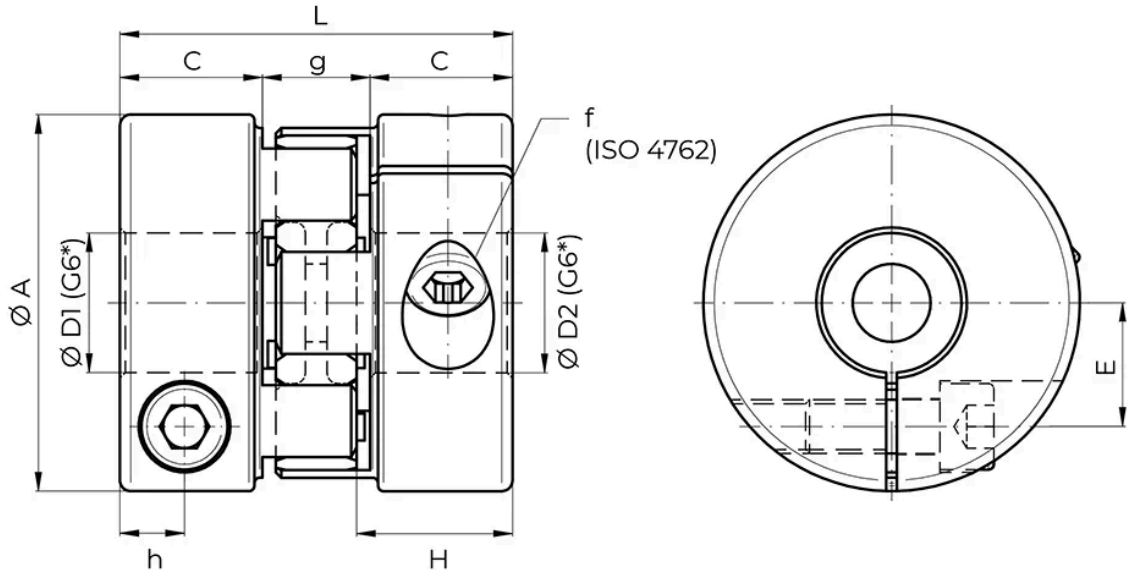

*Other bore tolerances on request.

Designation	Nominal Torque (Nm)	A	L	C	g	f	E	ØD1/2 min.	ØD1/2 max.
EKM8	8	32	40 (±0.5)	13.5	13	M4 - Ts=4 Nm	10.5	6	15
EKM15	15	40	50 (±0.5)	17	16	M5 - Ts=8 Nm	13	7	20
EKM20	20	40	50 (±0.5)	17	16	M5 - Ts=8 Nm	13	8	20
EKM30	30	50	58 (±0.5)	20	18	M6 - Ts=14 Nm	16.5	10	25
EKM45	45	50	58 (±0.5)	20	18	M6 - Ts=14 Nm	16.5	12	25
EKM60	60	60	62 (±0.5)	22	18	M8 - Ts=35 Nm	19.5	13	28
EKM90	90	60	62 (±0.5)	22	18	M8 - Ts=35 Nm	19.5	14	28
EKM150	150	70	73 (±1)	26.5	20	M10 - Ts=50 Nm	23	16	32
EKM200	200	70	73 (±1)	26.5	20	M10 - Ts=50 Nm	23	18	32
EKM300	300	85	86 (±1)	31	24	M12 - Ts=90 Nm	29	20	40
EKM400	400	85	86 (±1)	31	24	M12 - Ts=90 Nm	29	24	40
EKM500	500	100	94 (±1)	33	28	M12 - Ts=115 Nm	36	28	56
EKM700	700	120	109 (±1)	38	33	M14 - Ts=140 Nm	44	30	70
EKM1000	1 000	120	109 (±1)	38	33	M14 - Ts=140 Nm	44	40	70
EKM2000	2 000	160	124 (±1)	42	40	M16 - Ts=290 Nm	55.5	48	90

Every care has been taken to ensure the accuracy of the information in this document, but we take no liability for any errors or omissions. We reserve the right to make changes without prior notice.