Elastomer Coupling ESM-A

- With conical hub on both sides
- Plug-in, backlash-free, oscillation dampening
- Rotational symmetry
- High speeds



Tightening torque refers to screws.
Peak torque is in general 1,5 times nominal.

Dimensions in mm. Length dimensions according to DIN ISO 2768 cH.

Material: Elastomer spider: polyurethane (size 2000: tempered steel) Conical hubs: high-tensile strength aluminum Clamping ring: heat treated steel - burnished Screws: ISO 4762 - 12.9
Temperature range (°C): Depends on size, see table.

Every care has been taken to ensure the accuracy of the information in this document, but we take no liability for any errors or omissions. We reserve the right to make changes without prior notice.

General Data

Designation	Nominal Torque (Nm)	Hardness (shore)	Moment of inertia (10^{-6}kg*m²)	Torsional stiffness (Nm/arcmin)	Axial max. shaft misalignment (mm)
ESM-A10	10	98 Sh-A	0.015	0.09	0.5
ESM-A17	17	98 Sh-A	0.05	0.24	0.5
ESM-A25	25	72 Sh-D	0.06	0.46	0.5
ESM-A43	43	98 Sh-A	0.19	0.7	0.5
ESM-A50	50	72 Sh-D	0.19	1.1	0.5
ESM-A60	60	98 Sh-A	0.28	1.0	0.5
ESM-A90	90	72 Sh-D	0.28	2.0	0.5
ESM-A150	150	98 Sh-A	0.65	1.2	1
ESM-A200	200	72 Sh-D	0.65	2.3	1
ESM-A320	320	98 Sh-A	2	3.6	1
ESM-A400	400	72 Sh-D	2	7.0	1
ESM-A500	500	98 Sh-A	5.6	4.5	1
ESM-A700	700	98 Sh-A	13	8	1
ESM-A1000	1 000	72 Sh-D	13	12	1
ESM-A2000	2 000	98 Sh-A	75	21	1

Designation	Lateral max. shaft misalignment (mm)	Lateral spring rate (N/mm)	Tightening Torque (Nm)	Max. Speed (rpm)	Weight (kg)	Temperature range (°C)
ESM-A10	0.1	600	2	35 000	0.11	–30° to +90°C
ESM-A17	0.1	2 100	3	28 000	0.28	–30° to +90°C
ESM-A25	0.07	2 900	3	28 000	0.28	–20° to +120°C
ESM-A43	0.1	2 500	6	23 000	0.4	–30° to +90°C
ESM-A50	0.07	3 600	6	23 000	0.4	–20° to +120°C
ESM-A60	0.1	2 600	6	21 000	0.6	–30° to +90°C
ESM-A90	0.07	3 700	6	21 000	0.6	–20° to +120°C
ESM-A150	0.1	3 300	6	18 000	0.9	–30° to +90°C
ESM-A200	0.07	4 600	6	18 000	0.9	–20° to +120°C
ESM-A320	0.12	4 500	30	14 000	1.9	–30° to +90°C
ESM-A400	0.1	6 500	30	14 000	1.9	–20° to +120°C
ESM-A500	0.15	5 900	50	11 000	4.5	–30° to +90°C
ESM-A700	0.15	7 000	100	9 500	7	–30° to +90°C
ESM-A1000	0.1	9 600	100	9 500	7	–20° to +120°C
ESM-A2000	0.15	9 000	100	7 000	20	–30° to +90°C

Every care has been taken to ensure the accuracy of the information in this document, but we take no liability for any errors or omissions. We reserve the right to make changes without prior notice.

Dimensions

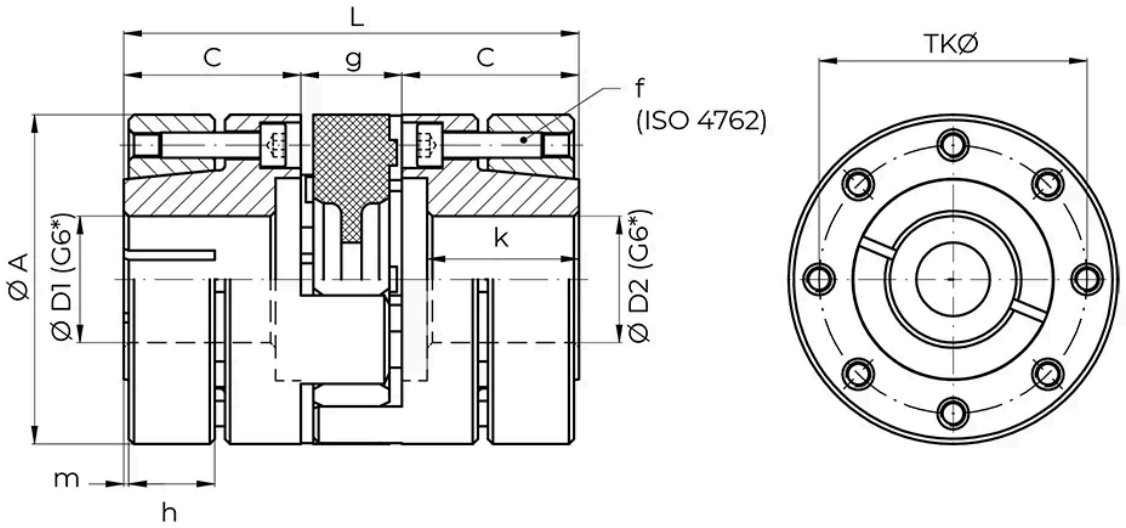

*Other bore tolerances on request.

Designation	Nominal Torque (Nm)	A	L	C	g	f	k	m	ØD1/2 min.
ESM-A10	10	32	50 (±0.5)	18.5	13	4xM3 - Ts= 2 Nm	15.5	1	6
ESM-A17	17	40	66 (±0.5)	25	16	6xM4 - Ts= 3Nm	21	1	9
ESM-A25	25	40	66 (±0.5)	25	16	6xM4 - Ts= 3Nm	21	1	10
ESM-A43	43	50	78 (±0.5)	30	18	4xM5 - Ts= 6Nm	25	1	12
ESM-A50	50	50	78 (±0.5)	30	18	4xM5 - Ts= 6Nm	25	1	15
ESM-A60	60	55	78 (±0.5)	30	18	4xM5 - Ts= 8Nm	25	1	13
ESM-A90	90	55	78 (±0.5)	30	18	4xM5 - Ts= 6Nm	25	1	17
ESM-A150	150	65	90 (±1)	35	20	8xM5 - Ts= 6Nm	30	1	17
ESM-A200	200	65	90 (±1)	35	20	8xM5 - Ts=6 Nm	30	1	19
ESM-A320	320	80	114 (±1)	45	24	4xM8 - Ts= 30Nm	40	1	20
ESM-A400	400	80	114 (±1)	45	24	4xM8 - Ts= 30Nm	40	1	25
ESM-A500	500	100	138 (±1)	55	28	4xM10 - Ts= 50Nm	48	1	22
ESM-A700	700	120	155 (±1)	61	33	4xM12 - Ts= 100Nm	54	1.2	25
ESM-A1000	1 000	120	155 (±1)	61	33	4xM12 - Ts= 100Nm	54	1	25
ESM-A2000	2 000	160	186 (±1)	73	40	8xM12 - Ts= 100Nm	73	-	35

Designation	ØD1/2 max.	ØD1/2 prebored	TKØ
ESM-A10	14	5	24.5
ESM-A17	19	9	31
ESM-A25	19	9	31
ESM-A43	24	10	39.5
ESM-A50	24	10	39.5
ESM-A60	26	12	43
ESM-A90	26	12	43
ESM-A150	36	12	53
ESM-A200	36	12	53

Every care has been taken to ensure the accuracy of the information in this document, but we take no liability for any errors or omissions. We reserve the right to make changes without prior notice.

Designation	ØD1/2 max.	ØD1/2 prebored	TKØ
ESM-A320	40	18	64
ESM-A400	40	18	64
ESM-A500	48	20	79
ESM-A700	60	24	96
ESM-A1000	60	24	96
ESM-A2000	85	34	130

Every care has been taken to ensure the accuracy of the information in this document, but we take no liability for any errors or omissions. We reserve the right to make changes without prior notice.