Miniature Metal Bellows Coupling MKP

• Short design with lateral clamping hub
• High torsional stiffness - flexible



Tightening torque refers to screws.

Dimensions in mm. Length dimensions according to DIN ISO 2768 cH.

Material: Bellows: stainless steel Hubs: high-tensile strength aluminium Clamping screws: ISO 4762 - 12.9 Press-fit wire: brass
Temperature range (°C): –40° to +200°C
Max. Speed (rpm): 20 000

Every care has been taken to ensure the accuracy of the information in this document, but we take no liability for any errors or omissions. We reserve the right to make changes without prior notice.

General Data

Designation	Nominal Torque (Nm)	Max. Torque (Nm)	Moment of inertia (10^{-6}kg*m²)	Torsional stiffness (Nm/arcmin)	Axial max. shaft misalignment (mm)
MKP2	2	4	2.5	400	0.3
MKP5	5	10	0.8	800	0.3
MKP7	7	14	12	1 700	0.4
MKP8	8	16	25	2 100	0.5
MKP12	12	24	28	2 600	0.4

Designation	Lateral max. shaft misalignment (mm)	Axial spring rate (N/mm)	Lateral spring rate (N/mm)	Tightening Torque (Nm)	Weight (g)
MKP2	0.1	32	100	2	30
MKP5	0.1	70	400	2	40
MKP7	0.15	70	220	4	80
MKP8	0.15	20	90	8	125
MKP12	0.15	45	190	8	130

Dimensions

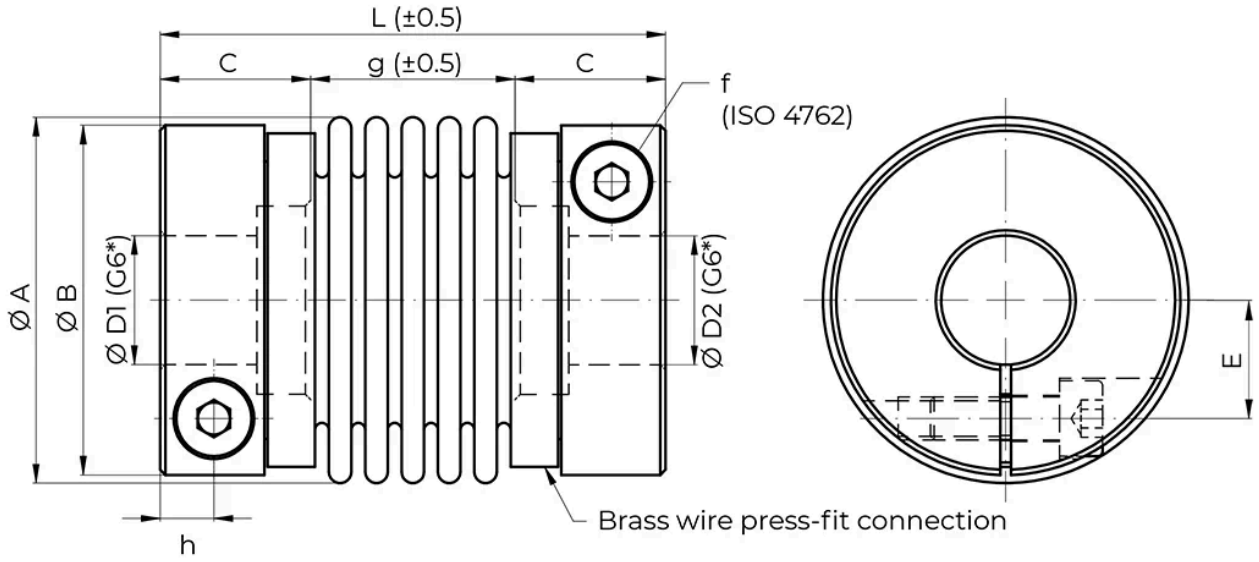

*Other bore tolerances on request.

Designation	Nominal Torque (Nm)	A	B	L	C	g	f	E	ØD1/2 min.
MKP2	2	24.5	-	35	13	9	M3	7.5	3
MKP5	5	24.5	-	36	13	10	M3	7.5	6
MKP7	7	34 (±0.5)	32.5	47	14	19	M4	11	6
MKP8	8	39.5	-	51	16.6	18	M5	13	6
MKP12	12	39.5	-	51	16.6	18	M5	13	6

Designation	ØD1/2 max.
MKP2	10

Every care has been taken to ensure the accuracy of the information in this document, but we take no liability for any errors or omissions. We reserve the right to make changes without prior notice.

Designation	ØD1/2 max.
MKP5	10
MKP7	17
MKP8	19
MKP12	19

Every care has been taken to ensure the accuracy of the information in this document, but we take no liability for any errors or omissions. We reserve the right to make changes without prior notice.